VIAIR®
Your Vital Air Source

92913 WIRING DIAGRAM

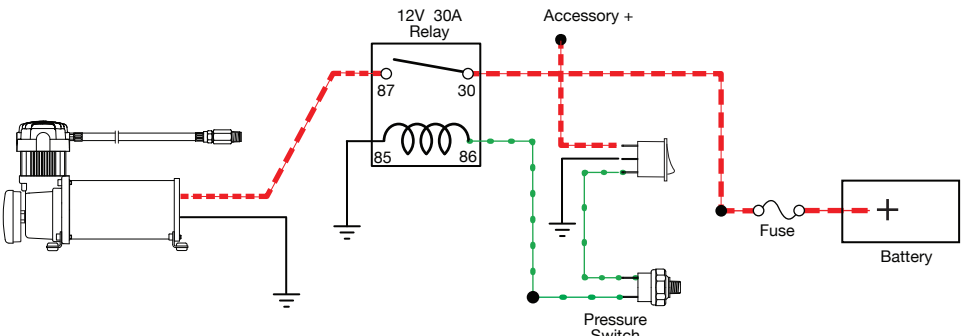

1. Red
2. Green
3. Black

15 Edelman
Irvine, CA 92618
949-585-0011
www.viaircorp.com

R1-072323 | © VIAIR Corporation, All Rights Reserved